CAMBRIDGE
International Education

Cambridge IGCSE™

CANDIDATE NAME									
CENTRE NUMBER						CANDIDATE NUMBER			

0123456789

DESIGN & TECHNOLOGY **0445/04**

Paper 4 Graphic Products **For examination from 2028**

SPECIMEN PAPER **1 hour**

You must answer on the two A3 pre-printed question sheets.

You will need: Two A3 pre-printed question sheets
Standard drawing equipment
Coloured pencils

INSTRUCTIONS

- Answer **all** questions.
- Write your name, centre number and candidate number in the boxes at the top of the page and on **both** pre-printed question sheets.
- Answer in the space provided on the question sheets.
- Do **not** use an erasable pen. Do **not** use correction fluid or tape.
- Do **not** write on any bar codes.
- You may use a calculator.
- You may use standard drawing equipment, including coloured pencils.
- You must show all construction and projection lines clearly where appropriate.
- At the end of the exam, put this cover sheet on top of the two question sheets and fold all three sheets together to make an A4 booklet.

INFORMATION

- The total mark for this paper is 50.
- The number of marks for each question or part question is shown in brackets [ ].
- All dimensions are in millimetres unless otherwise stated.

This document has **4** pages. Any blank pages are indicated.

© Cambridge University Press & Assessment 2025

[Turn over

BLANK PAGE

© Cambridge University Press & Assessment 2025

Answer **all** questions.

1 Figure 1.1 shows an image of an elephant.

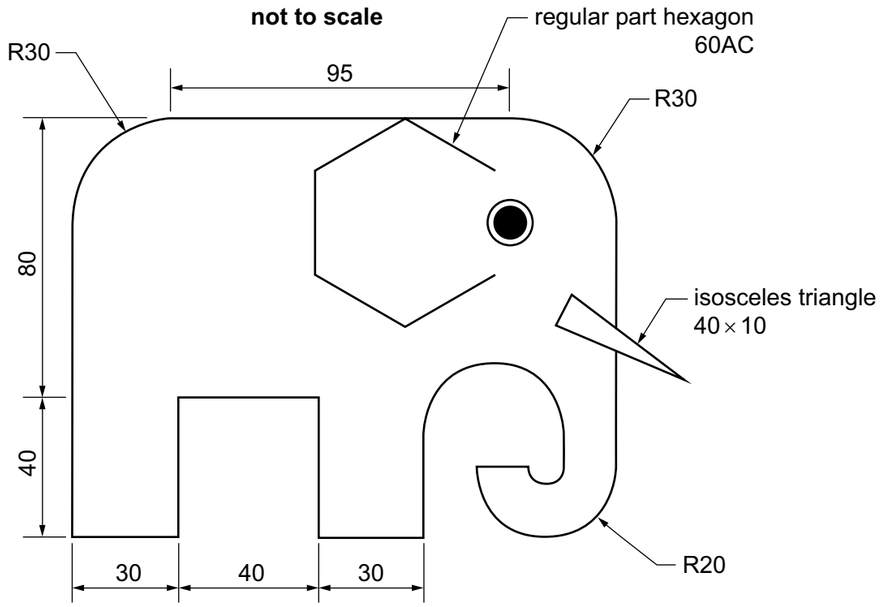

Figure 1.1

(a) Complete the full-size drawing of the elephant image in Figure 1.2. Use the information given in Figure 1.1. [9]

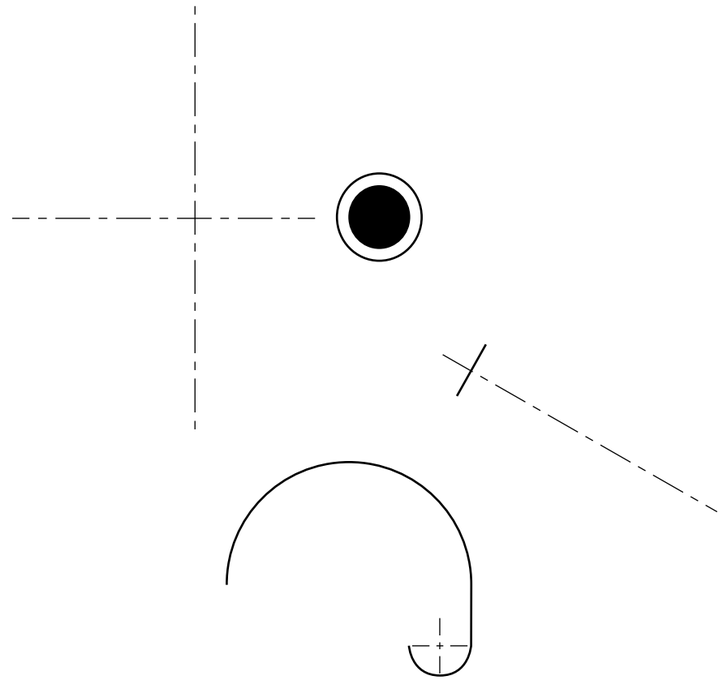

Figure 1.2

(b) The elephant image will be used on a sign for a wildlife park.

The sign is shown in Figure 1.3.

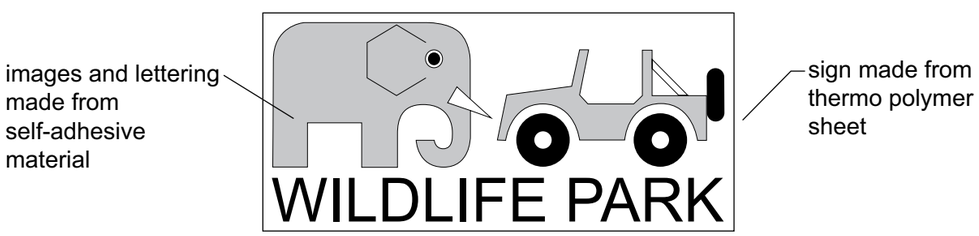

Figure 1.3

(i) Explain why a thermo polymer is a suitable material for the sign.

..... [1]

(ii) Computer-aided design and computer-aided manufacture (CAD/CAM) could be used to produce the images and lettering for the sign.

State **two** advantages of using CAD/CAM to produce the images and lettering compared to producing them by hand.

1 .....

2 .....

[2]

(iii) The lettering could be made from a photochromic material.
Describe how photochromic materials work.

.....

.....

..... [2]

For examiner's use

© Cambridge University Press & Assessment 2025

2 A signpost in the wildlife park is used to show the directions to different areas of the park.
Figure 2.1 shows the top section of the post.

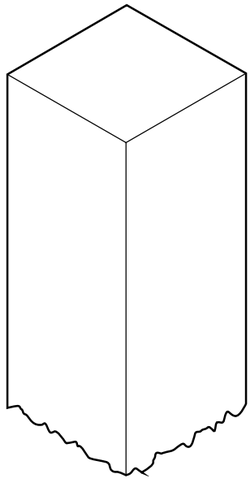

Figure 2.1

(a) Render Figure 2.1 to look like natural timber. [2]

(b) Explain whether softwood or hardwood is more suitable for the post. Justify your choice.

.....

.....

.....

..... [2]

(c) The post has signs added on three sides, pointing to areas of the wildlife park.

Each sign is the same shape and size.

Complete the isometric drawing of the signpost in Figure 2.2 by adding the sign for the café. [3]

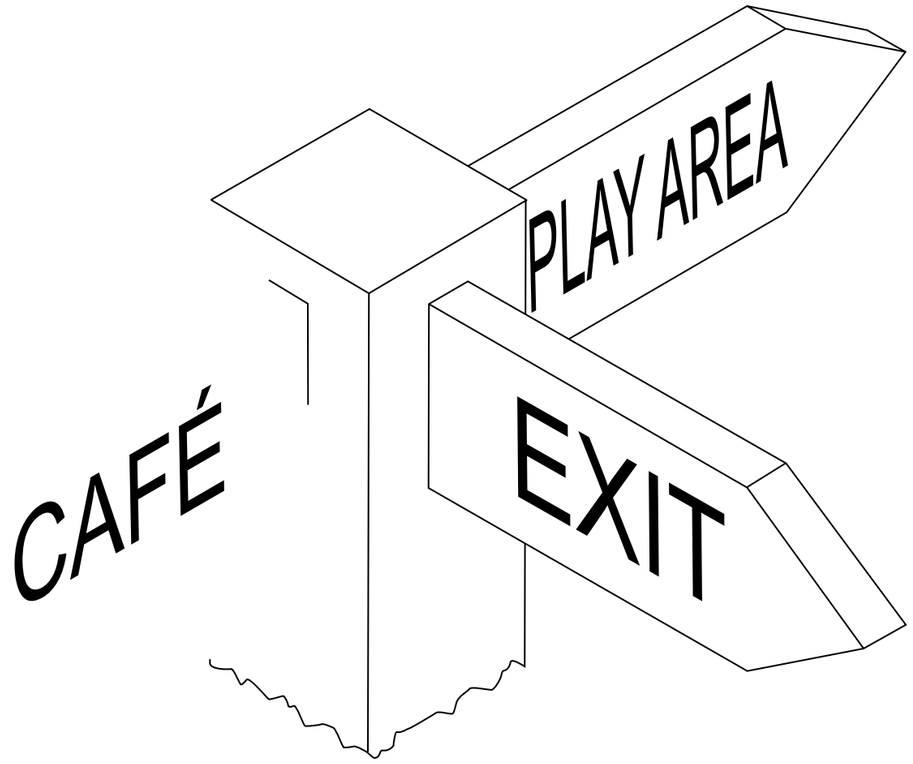

Figure 2.2

(d) Figure 2.3 shows an alternative sign for the play area.



Figure 2.3

(i) Explain **one** benefit of the alternative sign compared to the written sign in **2(c)**.

.....

..... [2]

(ii) An alternative sign for the café is also required.

Sketch a new design for the café sign that does **not** use text. [2]

© Cambridge University Press & Assessment 2025

3 A display board next to each animal enclosure is needed to show information about the animals.

Figure 3.1 shows an isometric view of a design for a display board.
The display board will be made from 30 mm thick softwood.

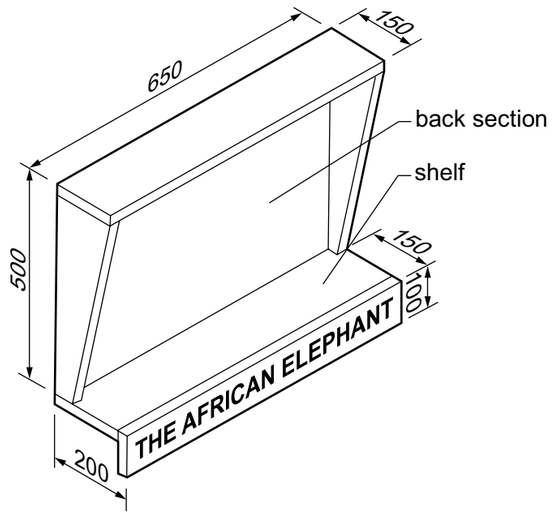

not to scale

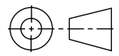

plan

side view



front view

Figure 3.1

(a) Complete the orthographic views of the display board design to a scale of 1 : 10. [12]

(b) The information for the display board will be printed onto thin card and attached to the back section as shown in Figure 3.2.

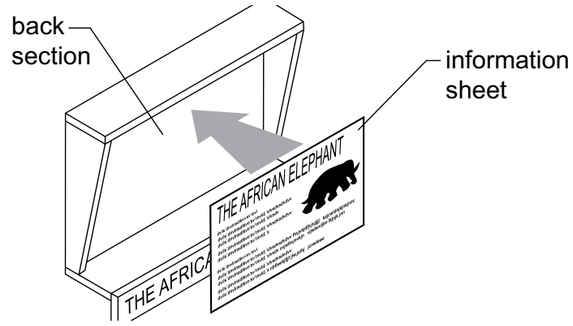

Figure 3.2

(i) Sketch a method of attaching the information sheet to the back section that will allow the information sheet to be changed easily.

[3]

(ii) Name a protective finish that could be applied to the thin card to make it more weather resistant.

..... [1]

(c) A tray containing information leaflets about each animal will be placed on the shelf of the display board.
Figure 3.3 shows the leaflet tray and an incomplete development (net).
Complete the development (net) to a scale of 1 : 5. [6]

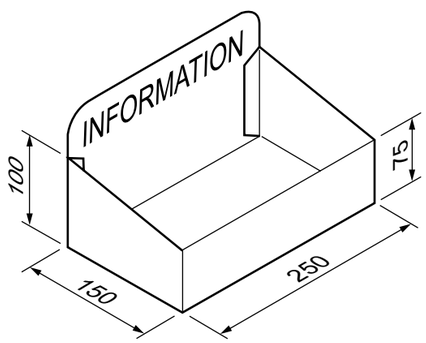

not to scale

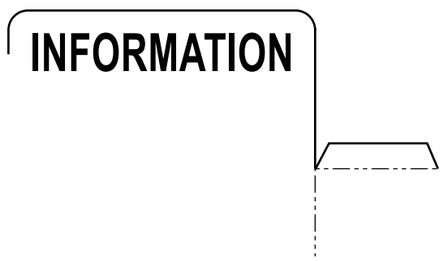

development (net)

Figure 3.3

(d) Consider the stages in the life cycle of the information leaflets:

- Trees are felled and cut into pieces.
- Paper is manufactured.
- Leaflets are printed.
- Leaflets are transported to the wildlife park.
- Leaflets are read / taken away.
- Leaflets are thrown away.

Explain **one** environmental impact of the leaflets. Suggest **one** improvement that could be made to reduce the environmental impact.

explanation .....

.....

.....

improvement .....

..... [3]

© Cambridge University Press & Assessment 2025

* 0 1 2 3 4 5 6 7 8 9 *

Centre number ..... Candidate number ..... Candidate name .....

BLANK PAGE

© Cambridge University Press & Assessment 2025

BLANK PAGE

© Cambridge University Press & Assessment 2025

BLANK PAGE

Permission to reproduce items where third-party owned material protected by copyright is included has been sought and cleared where possible. Every reasonable effort has been made by the publisher (Cambridge University Press & Assessment) to trace copyright holders, but if any items requiring clearance have unwittingly been included, the publisher will be pleased to make amends at the earliest possible opportunity.

Cambridge International Education is the name of our awarding body and a part of Cambridge University Press & Assessment, which is a department of the University of Cambridge.

© Cambridge University Press & Assessment 2025